Cambridge Assessment International Education

Cambridge International AS & A Level

COMPUTER SCIENCE **9608/13**

Paper 1 Theory Fundamentals **October/November 2021**

MARK SCHEME

Maximum Mark: 75

Published

This mark scheme is published as an aid to teachers and candidates, to indicate the requirements of the examination. It shows the basis on which Examiners were instructed to award marks. It does not indicate the details of the discussions that took place at an Examiners' meeting before marking began, which would have considered the acceptability of alternative answers.

Mark schemes should be read in conjunction with the question paper and the Principal Examiner Report for Teachers.

Cambridge International will not enter into discussions about these mark schemes.

Cambridge International is publishing the mark schemes for the October/November 2021 series for most Cambridge IGCSE™, Cambridge International A and AS Level components and some Cambridge O Level components.

This document consists of **9** printed pages.

© UCLES 2021

Generic Marking Principles

These general marking principles must be applied by all examiners when marking candidate answers. They should be applied alongside the specific content of the mark scheme or generic level descriptors for a question. Each question paper and mark scheme will also comply with these marking principles.

GENERIC MARKING PRINCIPLE 1:

Marks must be awarded in line with:

- the specific content of the mark scheme or the generic level descriptors for the question
- the specific skills defined in the mark scheme or in the generic level descriptors for the question
- the standard of response required by a candidate as exemplified by the standardisation scripts.

GENERIC MARKING PRINCIPLE 2:

Marks awarded are always **whole marks** (not half marks, or other fractions).

GENERIC MARKING PRINCIPLE 3:

Marks must be awarded **positively**:

- marks are awarded for correct/valid answers, as defined in the mark scheme. However, credit is given for valid answers which go beyond the scope of the syllabus and mark scheme, referring to your Team Leader as appropriate
- marks are awarded when candidates clearly demonstrate what they know and can do
- marks are not deducted for errors
- marks are not deducted for omissions
- answers should only be judged on the quality of spelling, punctuation and grammar when these features are specifically assessed by the question as indicated by the mark scheme. The meaning, however, should be unambiguous.

GENERIC MARKING PRINCIPLE 4:

Rules must be applied consistently, e.g. in situations where candidates have not followed instructions or in the application of generic level descriptors.

GENERIC MARKING PRINCIPLE 5:

Marks should be awarded using the full range of marks defined in the mark scheme for the question (however; the use of the full mark range may be limited according to the quality of the candidate responses seen).

GENERIC MARKING PRINCIPLE 6:

Marks awarded are based solely on the requirements as defined in the mark scheme. Marks should not be awarded with grade thresholds or grade descriptors in mind.

© UCLES 2021

<table>
<tr><th>Question</th><th>Answer</th><th>Marks</th></tr>
<tr><td>1(a)</td><td>1 mark for working
1 mark for correct answer

11001011
00110100 flip bits
00110101 add 1
32 + 16 + 4 + 1

Answer: −53</td><td>2</td></tr>
<tr><td>1(b)</td><td>AD</td><td>1</td></tr>
<tr><td>1(c)</td><td>0001 0111 0101 0011</td><td>1</td></tr>
<tr><td>1(d)</td><td>1 mark per bullet point to max 2

Any scenario where a single digit needs to be displayed or transmitted

• Electronic calculator displays
• Date and time stored in BIOS of PCs or games consoles
• Financial applications
• Identification of latitude and longitude (e.g. cell towers)
• Barcodes (MSI)</td><td>2</td></tr>
<tr><td>1(e)</td><td>1 mark for three correct columns
2 mark for all columns correct

<table>
<tr><th>Original character</th><th>W</th><th>A</th><th>N</th><th>D</th><th>S</th></tr>
<tr><td>ASCII denary value</td><td>87</td><td>65</td><td>78</td><td>68</td><td>83</td></tr>
<tr><td>ASCII denary value + 3</td><td>90</td><td>68</td><td>81</td><td>71</td><td>86</td></tr>
<tr><td>Encrypted character</td><td>Z</td><td>D</td><td>Q</td><td>G</td><td>V</td></tr>
</table>
</td><td>2</td></tr>
</table>

Question	Answer	Marks
2(a)(i)	44.1 kHz = **44 100** samples/measurements <u>per second/unit of time</u>	**1**
2(a)(ii)	**16** bits are used to store each sample	**1**

Question	Answer	Marks
2(b)	**1 mark** per bullet point to **max 4** • Uses switches and circuits to translate keystrokes into signals the computer can understand • The key matrix is a grid of circuits / three layers of plastic underneath the keys • Each circuit is broken beneath the key / middle layer contains holes • When key pressed, a circuit is made / completed and a signal is sent • The (keyboard) processor compares location of signal from key matrix to a character map stored on ROM • A character code for each key press is saved in a keyboard buffer	**4**

Question	Answer	Marks
3(a)	**1 mark** per bullet point to **max 2** for each, **max 4** • Public is assigned by an ISP • Public IP addresses can be accessed by anyone using the Internet • Public is used to get internet service • Public IP addresses must be unique throughout the Internet • Private is assigned by a router • Private IP addresses cannot be accessed by anyone using the Internet • Private is used to communicate within a network • Private can be duplicated in different networks // private addresses are unique only within the (local) network	**4**
3(b)	**1 mark** for each correct entry The user enters the Uniform Resource Locator (URL) into the address bar of the (**web) browser**. The domain name is taken from the URL and sent to a Domain Name Service (DNS). This stores **an index/a list/a table** of domain names and their matching IP addresses. If it finds the domain name, it sends the IP address to the (**web) browser**. If it does not find the domain name, it sends the request **to a higher level/another DNS**.	**4**

Question	Answer	Marks
4	**1 mark** for each correct gate 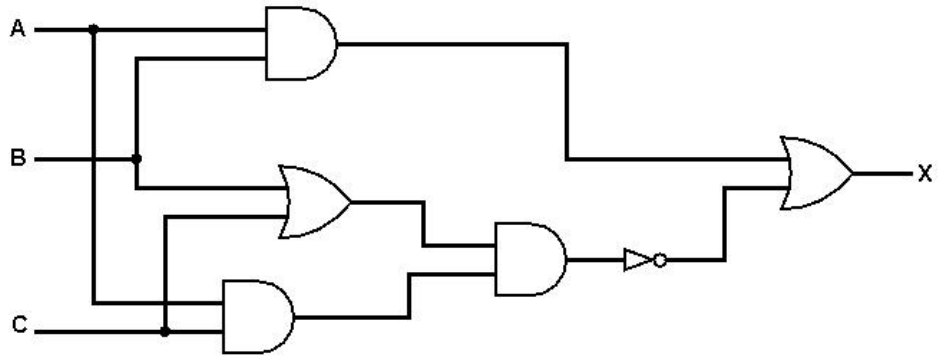 	**6**

Question	Answer	Marks
5(a)	**1 mark** per bullet point to **max 5** • PC stores the <u>address</u> of the <u>next</u> instruction • The address in the PC is incremented • MAR points to the memory location to be accessed • MDR holds the data read from /to be written to... • …the address pointed to by the MAR • The instruction from the MDR is copied to the CIR • CIR holds the current instruction • …instruction in CIR is decoded • Decoded instruction in the CIR is executed by the processor	**5**
5(b)	**1 mark** per bullet point • The ALU is the part of the processor that carries out arithmetic operations and logic comparisons. • The system clock generates the timing signals // the system clock synchronises all the components on the motherboard	**2**
5(c)	**1 mark** for each correct group **Instruction** / **Instruction group** `LDM #12` / Data movement `ADD 21` / Arithmetic Operations `STO 21` / Data Movement `CMP 21` / Compare Instructions `JPE 01` / Unconditional and Conditional Jump	**5**

Question	Answer	Marks
5(d)	**1 mark** per bullet point • In the first pass the **symbol** table is generated. • In the second pass the program is converted into **machine** code.	**2**

Question	Answer	Marks
6	**1 mark** for each correct entry	**4**

Utility software	Description
Disk formatter	**Initialise a disk for first use// Reformat a previously used disk// Partition a hard drive**
File compression	Reduce the size of the file
Defragmenter	**Find files that are not stored in contiguous blocks and move them together**
Backup	Making a copy of data in case of loss

Question	Answer	Marks
7(a)	**1 mark** first two rows and **1 mark** third row.	**2**

Measure	Data verification	Data validation
Parity check	✓	
Double entry	✓	
Format check		✓

Question	Answer	Marks
7(b)	**1 mark** from: • Checksum • Visual check • Echo check • ARQ	**1**

Question	Answer	Marks
7(c)	**1 mark** from: • Presence check • Existence check // uniqueness check • Length check • Range/Limit check • Type/character check • Consistency check	**1**

Question	Answer	Marks
8(a)	**1 mark** per bullet point to **max 4** • Frame is made up of pixels // is a single image • Each pixel has a binary value for its colour • **Consecutive** pixels with the same value/binary value/colour • …are stored as a single data value and a count • Accept a sensible example	**4**
8(b)	**1 mark** per bullet point to **max 2** • Reduce colour/bit depth • Reduce image resolution	**2**

Question	Answer	Marks
9(a)	**1 mark** per bullet point to **max 2** • Access rights • …manage the actions people can perform on parts of the database users have access to • Using views • …people can only see certain fields/tables • Put bank details in a different table • …limit access to that table	**2**
9(b)(i)	**1 mark** per correct bullet point • `SELECT SupName, SupPhone, SupContactName, NumberInStock` • `FROM SUPPLIER, STOCK` • `WHERE StockId = 'D930'` • `AND SUPPLIER.SupId = STOCK.SupId;`	**4**

Question	Answer	Marks
9(b)(ii)	**1 mark** per bullet point • `ALTER TABLE STOCK` • `ADD StockPrice REAL;`	**2**
9(c)	**1 mark** per bullet point to **max 6** For example: • Table names ... • ... to identify the tables • Foreign keys ... • ... to link tables // to create relationships between tables • Data types ... • ... to prevent the wrong data type being entered in a field • Passwords ... • ... to allow access only to authorised personnel • Access rights ... • ... for different levels of access	**6**

Question	Answer	Marks
9(d)	**1 mark** for each correct line 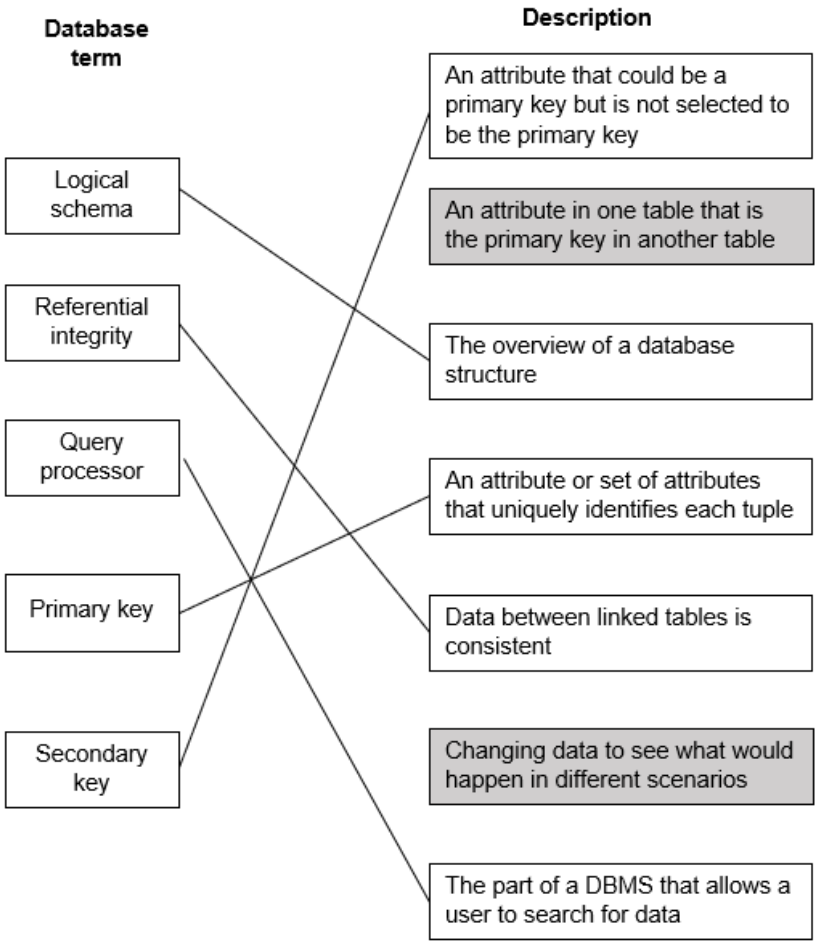 	**5**